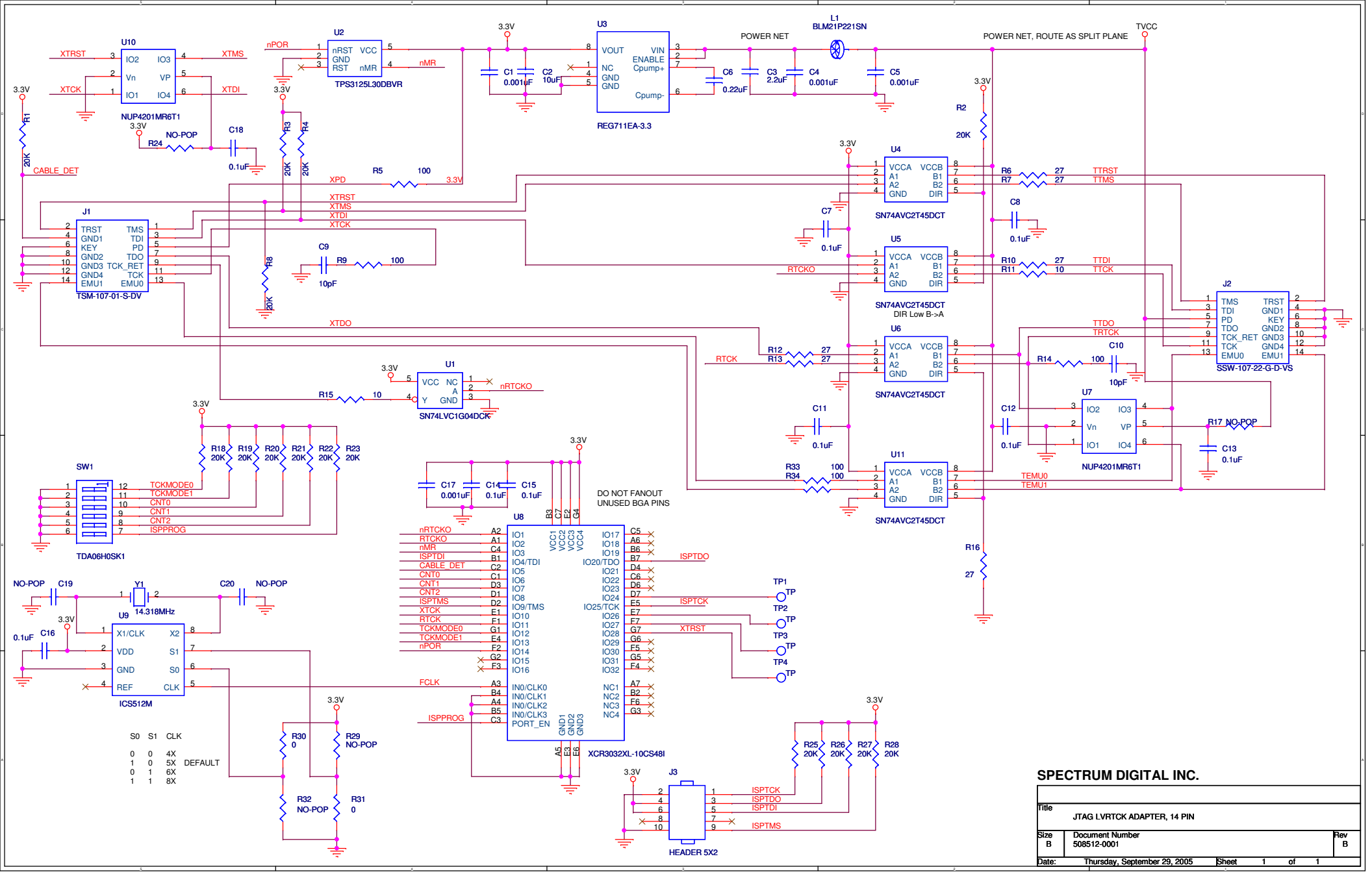

SPECTRUM DIGITAL INC.

Title	JTAG LVRTCK ADAPTER, 14 PIN	
Size B	Document Number 508512-0001	Rev B
Date: Thursday, September 29, 2005	Sheet 1 of 1	